ITEM #

MODEL #

NAME #

SIS #

AIA #

Planetary Mixers
Planetary Mixer, 20 lt - Table Model, with Hub, Single Phase

600146 (DXBM20ABT)	20 lt planetary mixer, bowl detection device and SOLID BPA free safety screen, with mechanical speed variation. Table top model. Equipped with spiral hook, paddle, whisk and H type accessory hub

Short Form Specification

Item No.

Table top model, suitable for all kneading, blending and whipping operations. Body in non-corrosive material with 20 litre 18/8 (AISI 302) stainless steel bowl. Powerful asynchronous motor (750 W) with mechanical speed variator (8 speed levels from 35 to 180 rpm). Water protected planetary system. Removable/transparent solid safety screen - made of a bisphenol-A free (BPA) copolyester. Water proof (IP55) and flat touch button control panel with 60 min. timer. Bowl detection device allows the mixer to switch on only when the bowl and the safety screen are properly installed and positioned together. Adjustable feet for stability. Equipped with accessory drive hub type H (accessories are not included). Supplied with 3 tools: spiral hook, paddle and whisk.

APPROVAL:

Main Features

- Professional beater mixer that provides all the basic mixer functions: kneading of all sort of pastes, mixing of semi-liquid products, emulsions and various sauces.
- Delivered with:
  - Spiral Hook, Paddle, Wire Whisk and Mixing Bowl for 20 lt
  - Accessory drive hub (accessories are not included)
- Waterproof touch button control panel with timer setting and display.
- Maximum capacity (flour, with 60% of hydration) 6 kg, suitable for 50-150 meals per service.
- Raising and lowering of the bowl controlled by lever with an automatic locking of the bowl when in the raised position.
- Mechanical speed variator.
- Bowl detection device allows the mixer to switch on only when the bowl and the solid safety screen are properly installed and positioned together.
- Solid BPA-free safety screen, covering the stainless steel wire one, limits the flour and unsafe dust particles when used in bakery and pastry preparation.
- Removable chute to add ingredients while working included as standard.

Construction

- Body in non-corrosive material.
- Compact design for table top installations.
- Sturdy construction with mechanically welded strong metal frame.
- 302 AISI Stainless steel bowl - 20 lt. capacity.
- Asynchronous motor with high start-up torque.
- 8 speeds, from 35 to 180 prm, to be lever operated while the machine is working, according to the tool and the mixture hardness.
- Planetary movement based on self lubricating gears, eliminating any risk of leaks.
- Water protected planetary system (IP55 electrical controls, IP23 overall machine).
- Power: 750 watts.
- The solid safety screen and the stainless steel wire structure are both removable and dismantled for cleaning and are dishwasher safe.
- Adjustable feet for perfect stability.

Included Accessories

- 1 of BOWL FOR 20LT MIXER — PNC 650121
- 1 of WHISK FOR 20LT MIXER — PNC 653109
- 1 of DOUGH HOOK FOR 20LT MIXER — PNC 653114

- 1 of PADDLE FOR 20LT MIXER PNC 653116

Optional Accessories

- BOWL FOR 20LT MIXER PNC 650121 ❑
- 10L BOWL,HOOK,PADDLE,WHISK FOR 20L MIXER PNC 650122 ❑
- WHISK FOR 20LT MIXER PNC 653109 ❑
- DOUGH HOOK FOR 20LT MIXER PNC 653114 ❑
- PADDLE FOR 20LT MIXER PNC 653116 ❑
- PUREE STRAINER FOR H HUB WITH 3 GRIDS PNC 653187 ❑
- VEGETAB.CUTTER H HUB+ EJECTOR-DISCONNECT. PNC 653225 ❑
- REINFORCED WHISK FOR 20LT MIXER PNC 653254 ❑
- S/S TABLE FOR 20LT PLANETARY MIXER PNC 653434 ❑
- EXT.SUPPORT(ALUM)-MEAT MINCER 70MM-H HUB PNC 653720 ❑
- ALUM.MEATMINCER KIT 70MM-H HUB-ENTERPRIS PNC 653721 ❑
- S/S MEATMINCER KIT 70MM-H HUB-ENTERPRISE PNC 653722 ❑
- S/S MEATMINCER KIT 70MM-H HUB-½ UNGER PNC 653723 ❑

The company reserves the right to make modifications to the products without prior notice. All information correct at time of printing.

Planetary Mixers
Planetary Mixer, 20 lt - Table Model, with Hub, Single Phase

Front

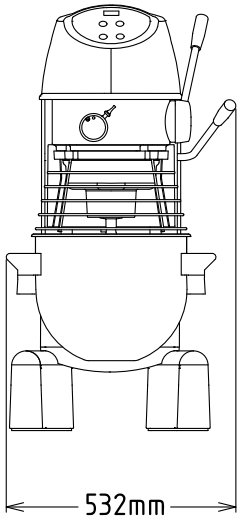

Side

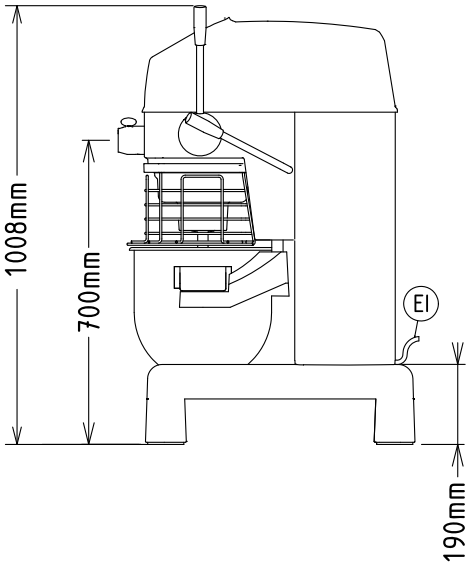

EI = Electrical inlet (power)

Top

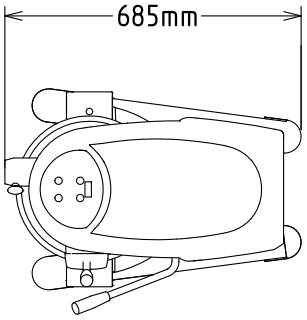

Electric	
Supply voltage:	220-240 V/1N ph/50 Hz
Electrical power max.:	0.75 kW
Total Watts:	0.75 kW
Capacity:	
Performance (up to):	6 kg/Cycle
Capacity:	20 litres
Key Information:	
External dimensions, Width:	521 mm
External dimensions, Depth:	685 mm
External dimensions, Height:	1010 mm
Shipping weight:	94 kg
Net weight (kg):	76
Cold water paste:	6 kg with Spiral hook
Egg whites:	32 with Whisk

The company reserves the right to make modifications to the products without prior notice. All information correct at time of printing.